DISCRETE MATH (MATH 2001)

REVIEW SHEET I

I. Set Theory
- (a) Informal notion of a set.
- (b) The axioms of set theory (ZFC).
- (c) Venn diagrams versus the directed graph model of set theory.
- (d) Constructions of new sets (pairing, union, power set, separation, intersection).
- (e) Empty set, successor of a set.
- (f) Inductive sets, natural numbers.
- (g) Naive set theory is inconsistent. Russell's Paradox.
- (h) Classes. The union of a set of sets is a set, while the intersection of a nonempty class of sets is a set.

II. Relations
- (a) Ordered pairs (Kuratowski encoding), triples, and n-tuples. Cartesian product.
- (b) Relations. Directed graph representation of binary relations.
- (c) Connection between relations and predicates.
- (d) Definition of a function. Definition of an operation.

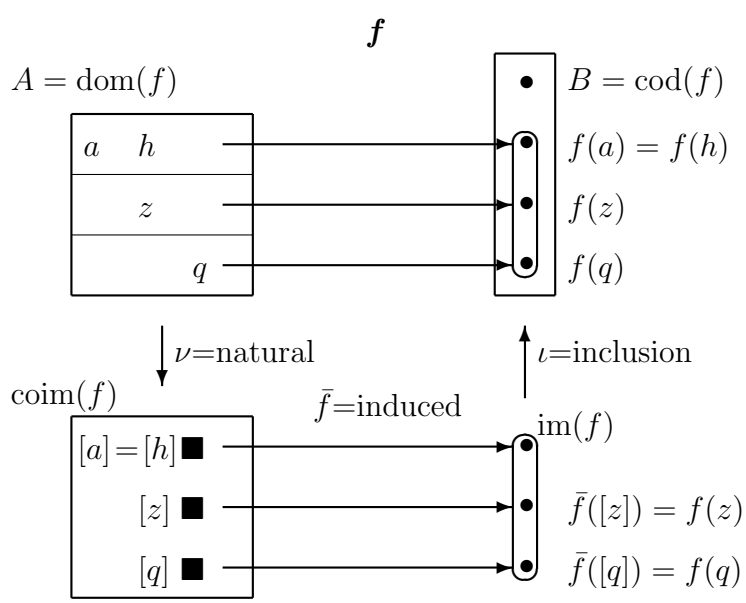

- (e) Domain, codomain, image, coimage. Canonical factorization of a function.
- (f) Inclusion map, identity map, natural map, induced map.
- (g) Injections, surjections, bijections. Composition.
- (h) Coimage versus kernel. Partition versus equivalence relation.

III. Recursion and induction (ordinary and strong).
   (a) $\mathbb{N}$ is the least inductive set.
   (b) Recursion Theorem.
   (c) Induction is a valid form of proof.
   (d) Recursive definitions of arithmetic operations on $\mathbb{N}$: $x + y, xy, x^y$.
   (e) Use of induction to prove laws of arithmetic.

General advice on preparing for a math test.
Be prepared to demonstrate understanding in the following ways.

(i) Know the definitions of new concepts, and the meanings of the definitions.
(ii) Know the statements and meanings of the major theorems.
(iii) Know examples/counterexamples. (The purpose of an example is to illustrate the extent of a definition or theorem. The purpose of a counterexample is to indicate the limits of a definition or theorem.)
(iv) Know how to perform the different kinds of calculations discussed in class.
(v) Be prepared to prove elementary statements. (Understanding the proofs done in class is the best preparation for this.)
(vi) Know how to correct mistakes made on old HW.

Practice Problems.

(1) How do you answer a question where you are asked to "Give an example"?

    Give an example of such a question.

(2) How do you answer a question where you are asked to "Give a definition"?

    Define "definition".

(3) If you are asked to "Give a proof or counterexample", how do you decide which thing to do?

    Give a proof or counterexample to the claim "Every prime is odd."

(4) Show that if $A \subseteq B$ and $B \subseteq A$, then $A = B$.

(5) Is it always true that $A \subseteq \mathcal{P}(A)$? If your answer is "No", is it sometimes true?

(6) Show that $\mathcal{P}(A) \cap \mathcal{P}(B) = \mathcal{P}(A \cap B)$.

(7) What is a function? (Give the definition.)

(8) For the function $f : \{0, 1, 2\} \to \{a, b, c\} : 0 \mapsto a, 1 \mapsto a, 2 \mapsto b$, write down each of the following sets.

(a) $\mathrm{dom}(f)$
(b) $\mathrm{cod}(f)$
(c) $\mathrm{im}(f)$
(d) $\mathrm{coim}(f)$
(e) ν (the natural map, written as a set)
(f) $\overline{f}$ (the induced map, written as a set)
(g) ι (the inclusion map, written as a set)
(h) $\ker(f)$

(9) Justify the claims that: (i) the squaring function $f : \mathbb{R} \to \mathbb{R} \colon x \mapsto x^2$ and the absolute value function $g \colon \mathbb{R} \to \mathbb{R} \colon x \mapsto |x|$ have the same kernel and image, but (ii) they are different functions.

(10) How many functions are there of the form $f : \mathbb{N} \to \emptyset$? How many functions are there of the form $f : \mathbb{N} \to \{\emptyset\}$?

(11) How many different partitions are there on the set $X = \{1, 2, 3\}$? How many different equivalence relations on X are there?

(12) Give examples of binary relations on $\mathbb{N}$ that are:

(a) reflexive and symmetric, but not transitive.

(b) reflexive and transitive, but not symmetric.

(c) symmetric and transitive, but not reflexive.

(13) Explain why induction is a valid form of proof.

(14) Prove that $m(n + k) = (mn) + (mk)$ for all $m, n, k \in \mathbb{N}$.

(15) Prove that $1^2 + 2^2 + \cdots + n^2 = \frac{n(n+1)(2n+1)}{6}$ by induction.

(16) State the theorem.

(a) Russell's paradox.

(b) Recursion Theorem.

(17) True or False? Explain.

(a) If $A \times A = B \times B$, then $A = B$.

(b) If $A \times B = B \times A$, then $A = B$.

(c) The class of equivalence relations on $\mathbb{N}$ is a set.

(d) The intersection of the class of all sets is a set.

(e) If $A \subseteq B \subseteq C$ and $|A| = |C|$, then $|A| = |B|$.