DISCRETE MATH
QUIZ 9

Name:_____

You have 10 minutes for this exam. If you have a question, raise your hand and remain seated. In order to receive full credit your answer must be **complete**, **legible** and **correct**.

1. Fill in the appropriate blanks with: dom(f), cod(f), im(f), coim(f), natural map, inclusion map, induced map.

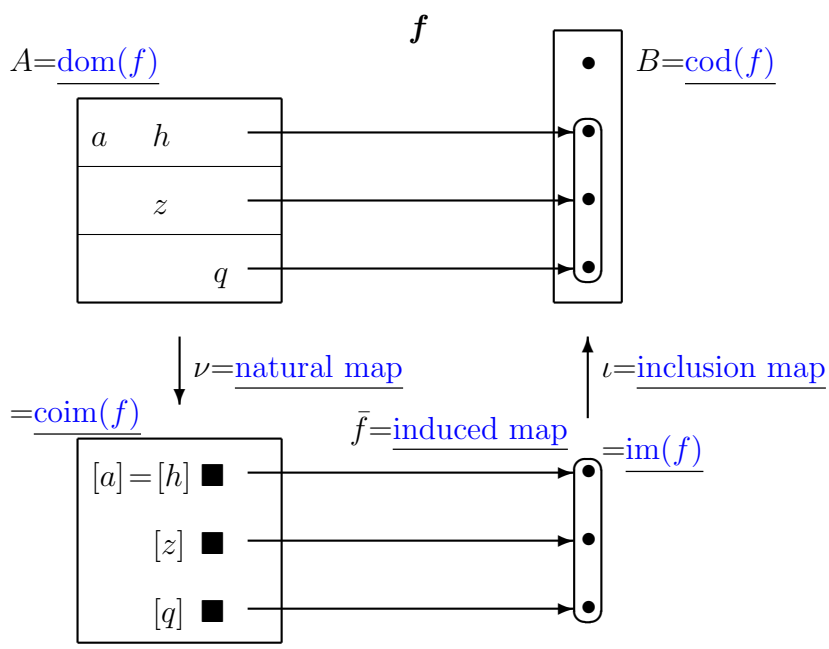

2. Define ***equivalence relation***.

An ***equivalence relation*** is a binary relation that is reflexive, symmetric and transitive.